Clipping tool

with automatic quality control

- **Mechanical engineering**
- **Realizations**
- **Cabling**
- **Machines**

This tool, mounted on the **workstation** of our automotive customer, allows 3 plastic parts to be clipped together.

By adding compliant devices, the tool adapts to the inevitable dimensional variations of the injected parts.

The components are installed manually and the pneumatic press provides the necessary force.

Various quality controls are carried out by palpation, component presence control and dimensional measurement.

The tooling also allows for **quality management of the part, by trapping it if it is defective and not identified as such**.

SPECIFICATIONS :

- **Pressing force = 200 daN**
- **Measurement of the position of the 6 clipping fingers**
- **Interface with workstation by means of a pneumatic and electrical mixed rapid setting**
- **Speed = 240 parts/h (including loading and unloading steps)**

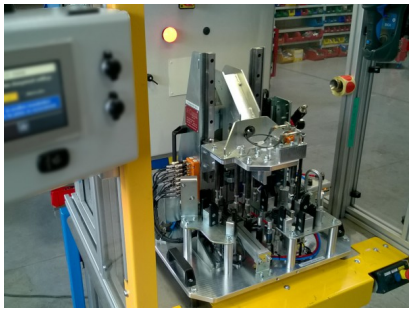

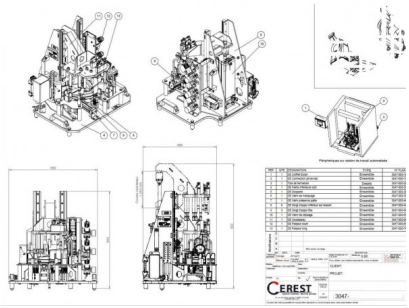

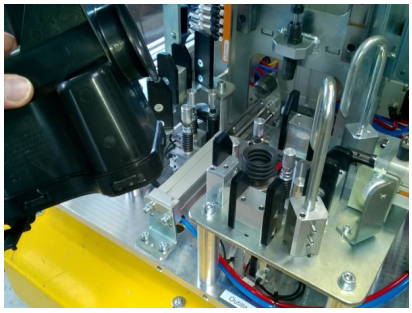

Reference : 3047

Project added the 09/08/19

CEREST
20 Rue des Frères Lumiere
68000 Colmar - FRANCE

EMAIL
cerest@cerest.com

PHONE
+33 (0)3.89.21.02.56

INTERNET
www.cerest.com